MÄVINN

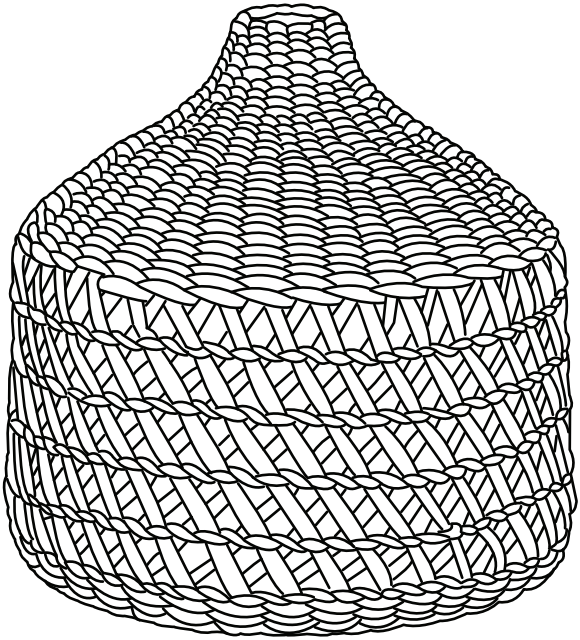

Design and Quality
IKEA of Sweden

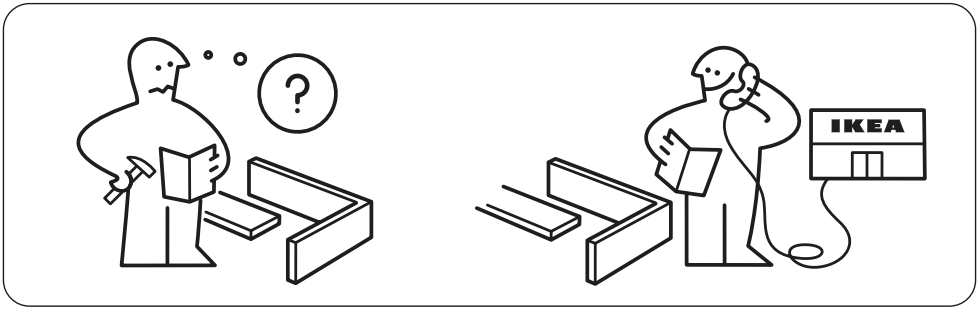

1x

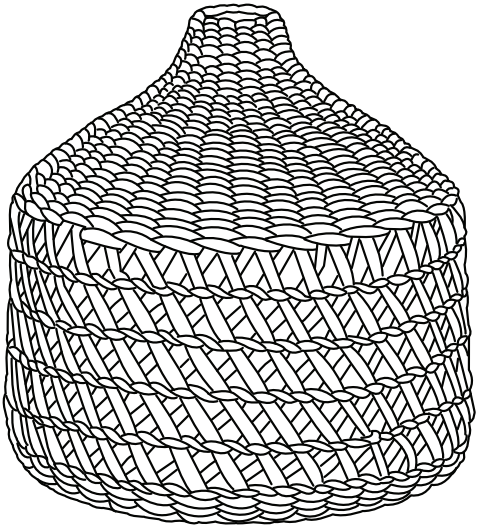

1x

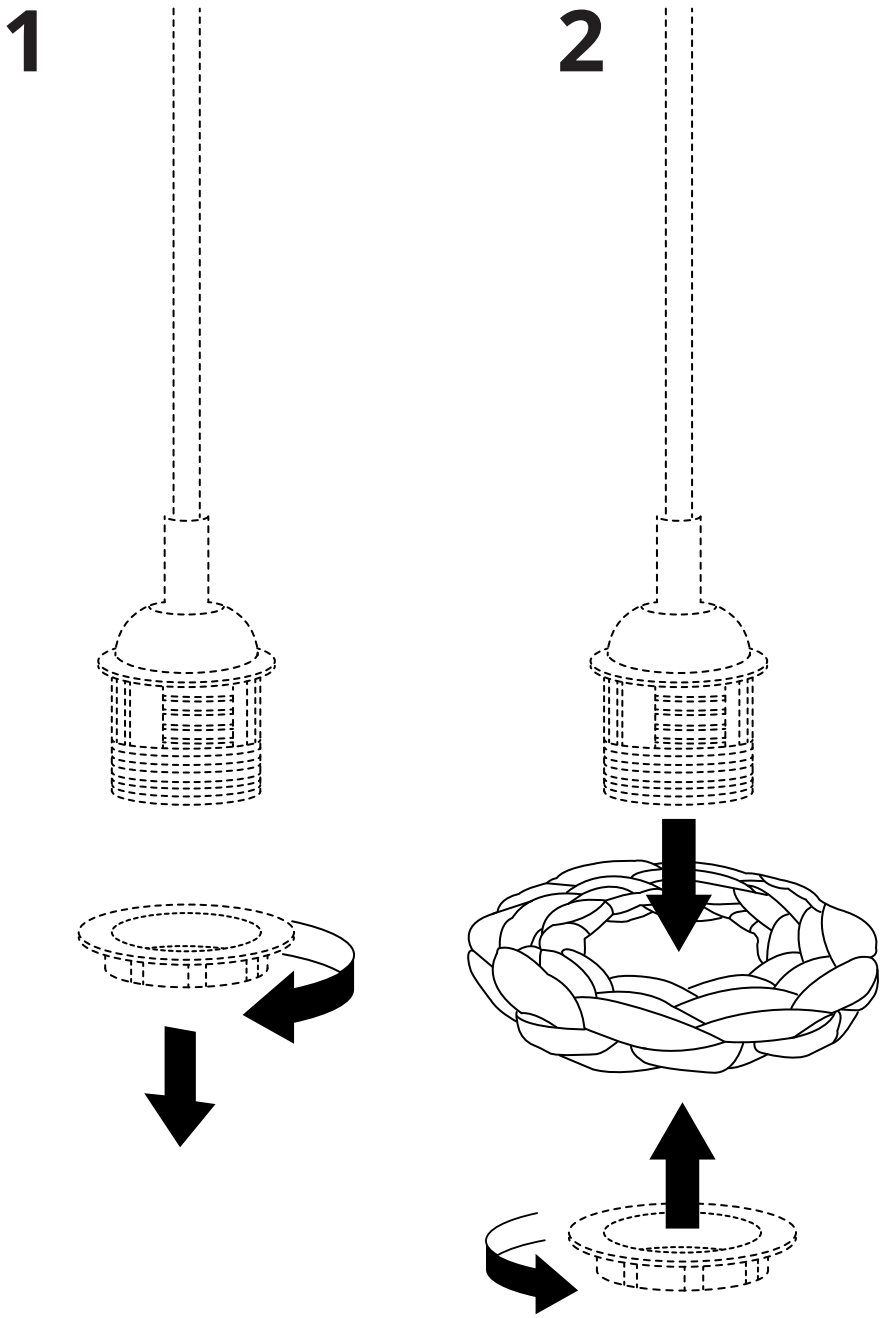

AA-2702987-1

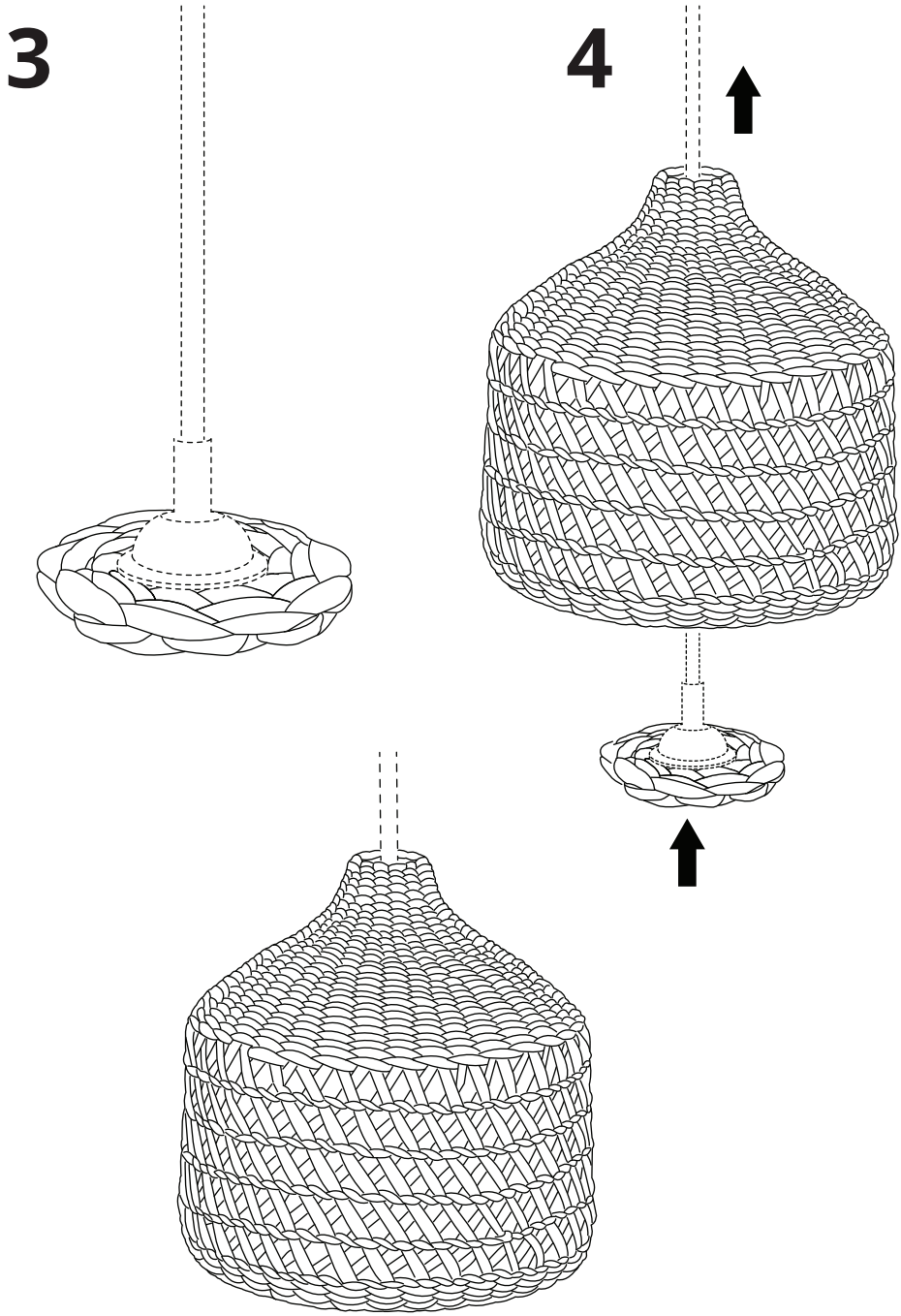

AA-2702987-1